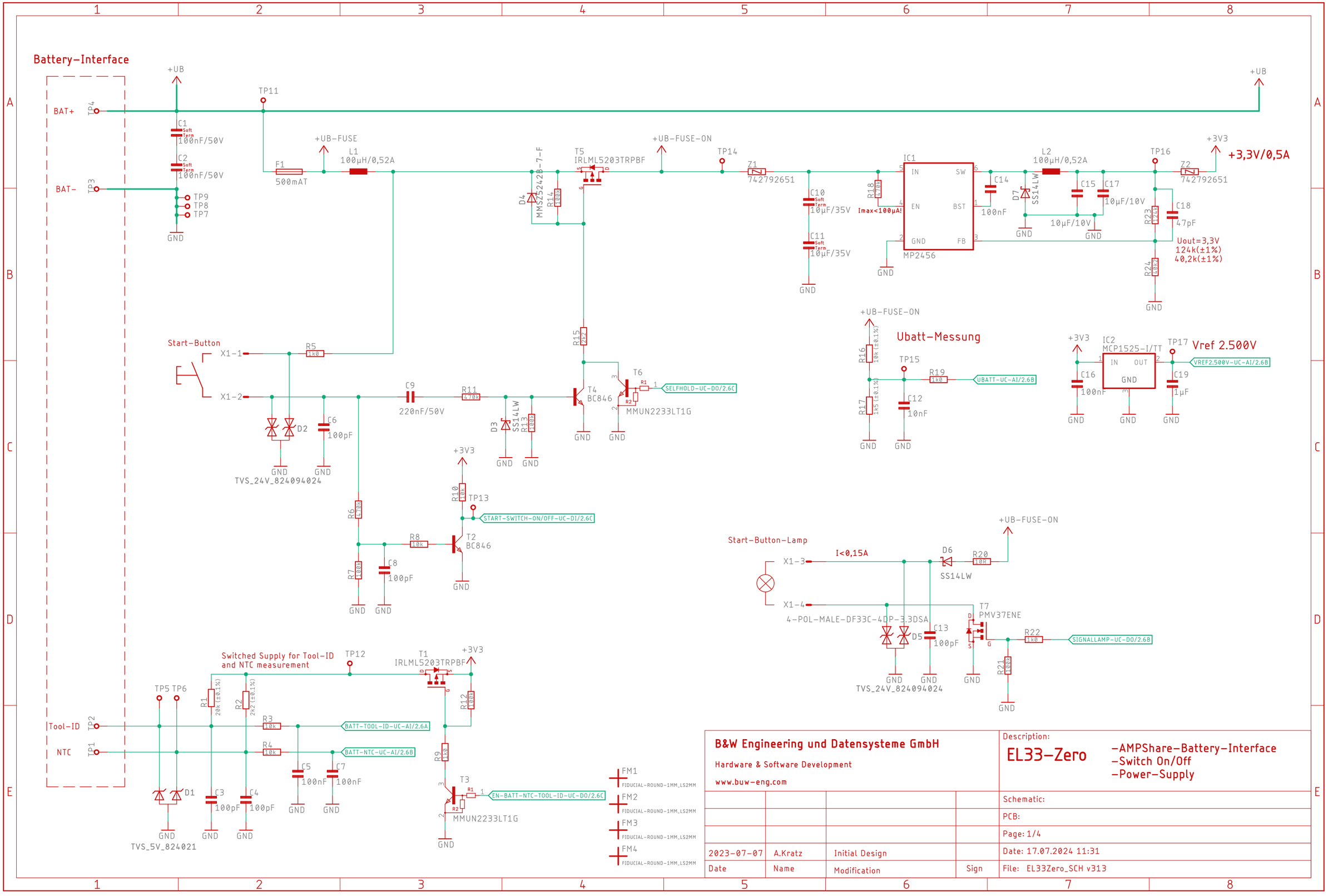

B&W Engineering und Datensysteme GmbH Hardware & Software Development www.buw-eng.com				Description: **EL33-Zero** –AMPShare-Battery-Interface –Switch On/Off –Power-Supply
				Schematic:
				PCB:
				Page: 1/4
2023-07-07	A.Kratz	Initial Design		Date: 17.07.2024 11:31
Date	Name	Modification	Sign	File: EL33Zero_SCH v313

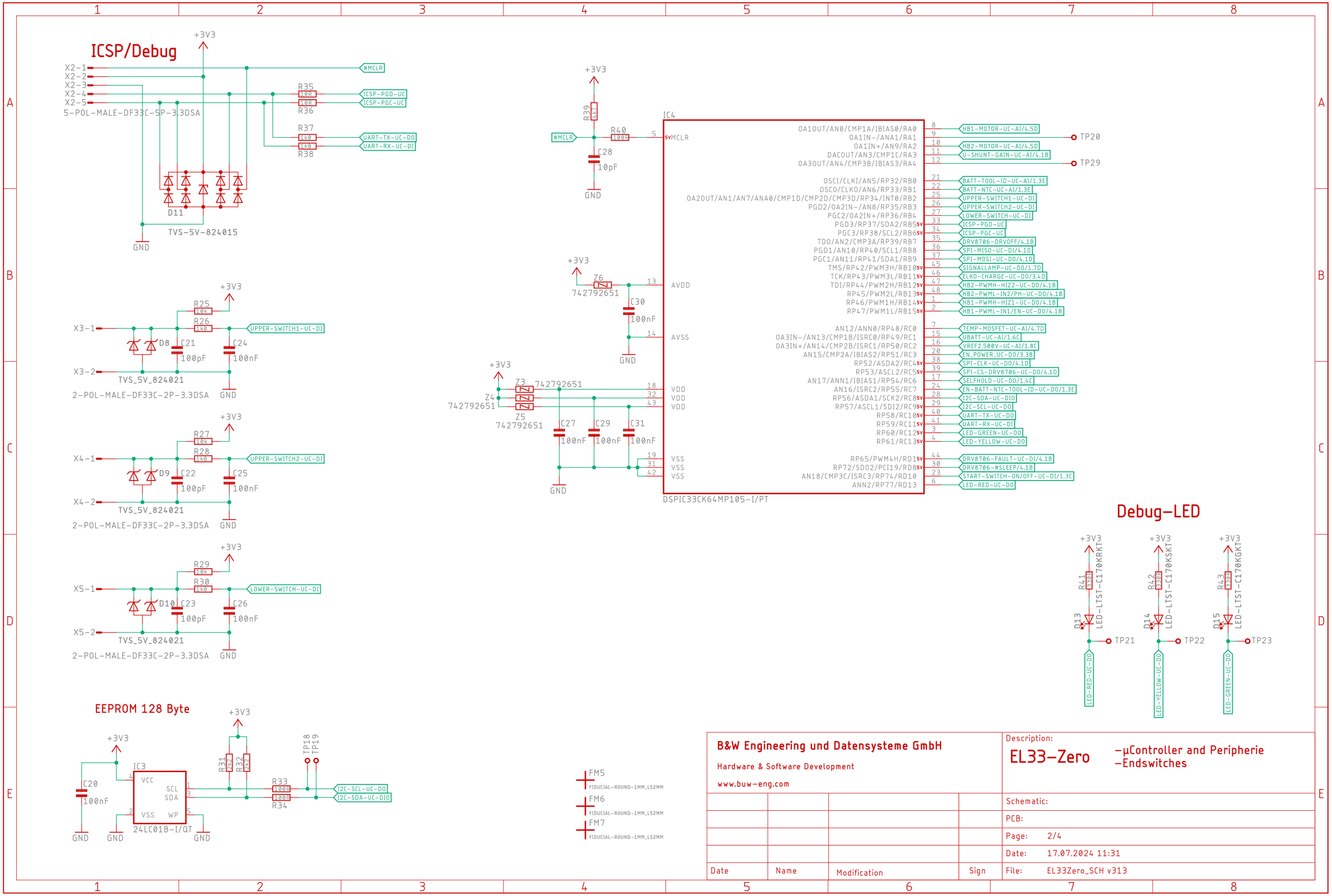
ICSP/Debug
X2-1
X2-2
X2-3
X2-4
X2-5
5-POL-MALE-DF33C-5P-3.3DSA
+3V3
#MCLR
R35 10R
R36 10R
ICSP-PGD-UC
ICSP-PGC-UC
R37 1k0
R38 1k0
UART-TX-UC-DO
UART-RX-UC-DI
D11
TVS-5V-824015
GND
X3-1
X3-2
R25 10k
R26 1k0
UPPER-SWITCH1-UC-DI
D8
C21 100pF
C24 100nF
TVS_5V_824021
2-POL-MALE-DF33C-2P-3.3DSA
X4-1
X4-2
R27 10k
R28 1k0
UPPER-SWITCH2-UC-DI
D9
C22 100pF
C25 100nF
X5-1
X5-2
R29 10k
R30 1k0
LOWER-SWITCH-UC-DI
D10
C23 100pF
C26 100nF
EEPROM 128 Byte
IC3
VCC
SCL
SDA
VSS
WP
24LC01B-I/QT
C20 100nF
R31 22
R32 22
R33 100R
R34 100R
TP18
TP19
I2C-SCL-UC-DO
I2C-SDA-UC-DIO
R39 1k2
R40 100k
C28 10pF
IC4
DSPIC33CK64MP105-I/PT
MCLR
AVDD
AVSS
VDD
VSS
Z6 742792651
C30 100nF
Z3 742792651
Z4 742792651
Z5 742792651
C27 100nF
C29 100nF
C31 100nF
OA1OUT/AN0/CMP1A/IBIAS0/RA0
OA1IN-/ANA1/RA1
OA1IN+/AN9/RA2
DACOUT/AN3/CMP1C/RA3
OA3OUT/AN4/CMP3B/IBIAS3/RA4
OSCI/CLKI/AN5/RP32/RB0
OSCO/CLKO/AN6/RP33/RB1
OA2OUT/AN1/AN7/ANA0/CMP1D/CMP2D/CMP3D/RP34/INT0/RB2
PGD2/OA2IN-/AN8/RP35/RB3
PGC2/OA2IN+/RP36/RB4
PGD3/RP37/SDA2/RB5
PGC3/RP38/SCL2/RB6
TDO/AN2/CMP3A/RP39/RB7
PGD1/AN10/RP40/SCL1/RB8
PGC1/AN11/RP41/SDA1/RB9
TMS/RP42/PWM3H/RB10
TCK/RP43/PWM3L/RB11
TDI/RP44/PWM2H/RB12
RP45/PWM2L/RB13
RP46/PWM1H/RB14
RP47/PWM1L/RB15
AN12/ANN0/RP48/RC0
OA3IN-/AN13/CMP1B/ISRC0/RP49/RC1
OA3IN+/AN14/CMP2B/ISRC1/RP50/RC2
AN15/CMP2A/IBIAS2/RP51/RC3
RP52/ASDA2/RC4
RP53/ASCL2/RC5
AN17/ANN1/IBIAS1/RP54/RC6
AN16/ISRC2/RP55/RC7
RP56/ASDA1/SCK2/RC8
RP57/ASCL1/SDI2/RC9
RP58/RC10
RP59/RC11
RP60/RC12
RP61/RC13
RP65/PWM4H/RD1
RP72/SDO2/PCI19/RD8
AN18/CMP3C/ISRC3/RP74/RD10
ANN2/RP77/RD13
HB1-MOTOR-UC-AI/4.5D
HB2-MOTOR-UC-AI/4.5D
U-SHUNT-GAIN-UC-AI/4.1B
TP20
TP29
BATT-TOOL-ID-UC-AI/1.3E
BATT-NTC-UC-AI/1.3E
UPPER-SWITCH1-UC-DI
UPPER-SWITCH2-UC-DI
LOWER-SWITCH-UC-DI
ICSP-PGD-UC
ICSP-PGC-UC
DRV8706-DRVOFF/4.1B
SPI-MISO-UC-DI/4.1D
SPI-MOSI-UC-DO/4.1D
SIGNALLAMP-UC-DO/1.7D
ELKO-CHARGE-UC-DO/3.4D
HB2-PWMH-HIZ2-UC-DO/4.1B
HB2-PWML-IN2/PH-UC-DO/4.1B
HB1-PWMH-HIZ1-UC-DO/4.1B
HB1-PWML-IN1/EN-UC-DO/4.1B
TEMP-MOSFET-UC-AI/4.7D
UBATT-UC-AI/1.6C
VREF2.500V-UC-AI/1.8C
EN_POWER_UC-DO/3.3B
SPI-CLK-UC-DO/4.1D
SPI-CS-DRV8706-UC-DO/4.1D
SELFHOLD-UC-DO/1.4C
EN-BATT-NTC-TOOL-ID-UC-DO/1.3E
I2C-SDA-UC-DIO
I2C-SCL-UC-DO
UART-TX-UC-DO
UART-RX-UC-DI
LED-GREEN-UC-DO
LED-YELLOW-UC-DO
DRV8706-FAULT-UC-DI/4.1B
DRV8706-#SLEEP/4.1B
START-SWITCH-ON/OFF-UC-DI/1.3C
LED-RED-UC-DO
Debug-LED
R41 330R
R42 330R
R43 330R
D13 LED-LTST-C170KRKT
D14 LED-LTST-C170KSKT
D15 LED-LTST-C170KGKT
TP21
TP22
TP23
FM5 FIDUCIAL-ROUND-1MM_LS2MM
FM6 FIDUCIAL-ROUND-1MM_LS2MM
FM7 FIDUCIAL-ROUND-1MM_LS2MM
B&W Engineering und Datensysteme GmbH
Hardware & Software Development
www.buw-eng.com
Description:
EL33-Zero
-µController and Peripherie
-Endswitches
Schematic:
PCB:
Page: 2/4
Date: 17.07.2024 11:31
File: EL33Zero_SCH v313
Date
Name
Modification
Sign

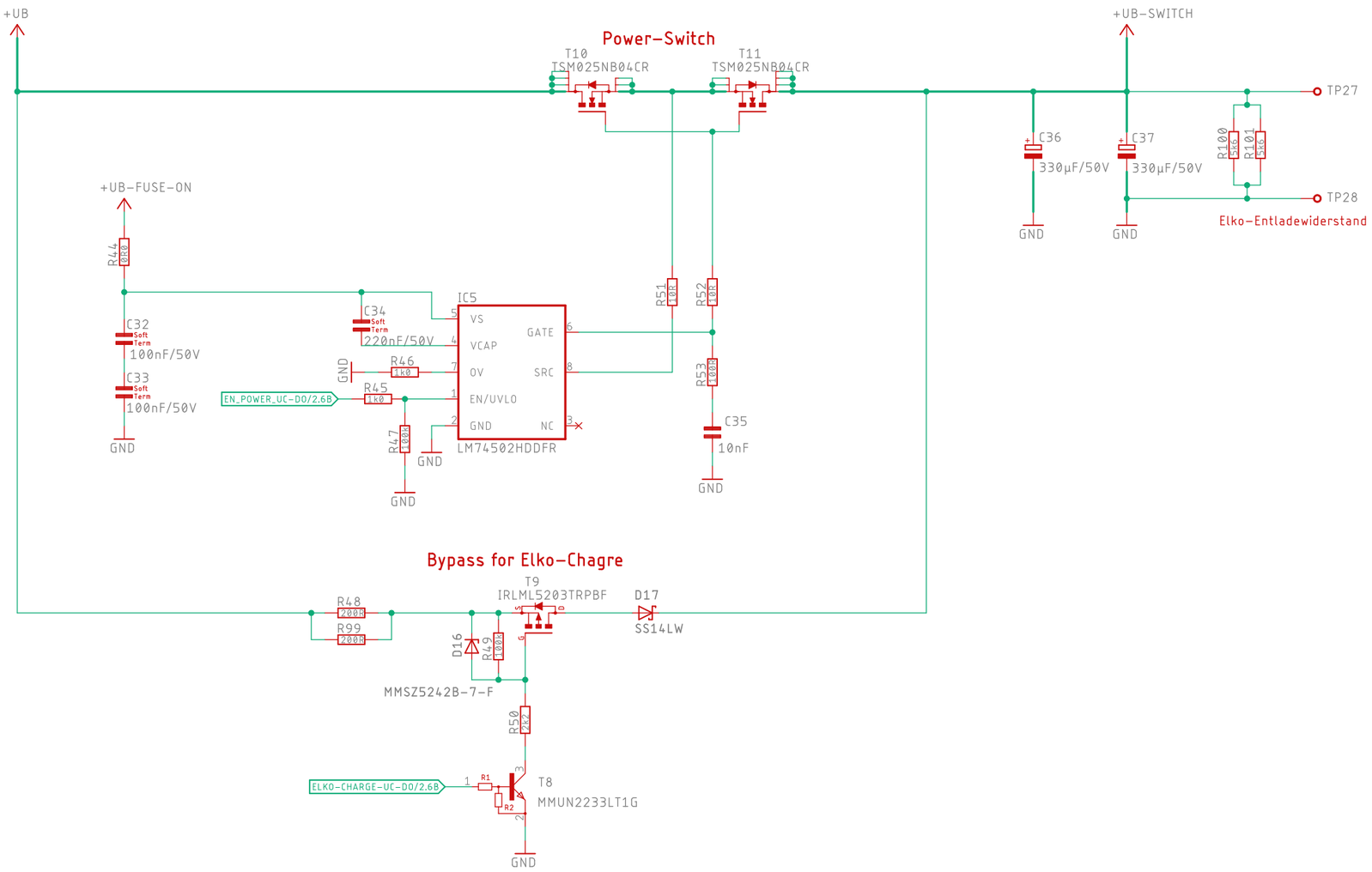

B&W Engineering und Datensysteme GmbH

Hardware & Software Development

www.buw-eng.com

Description:

EL33-Zero -Power-Switch
-Bypass Elko-Charge

				Schematic:
				PCB:
				Page: 3/4
				Date: 17.07.2024 11:31
Date	Name	Modification	Sign	File: EL33Zero_SCH v313

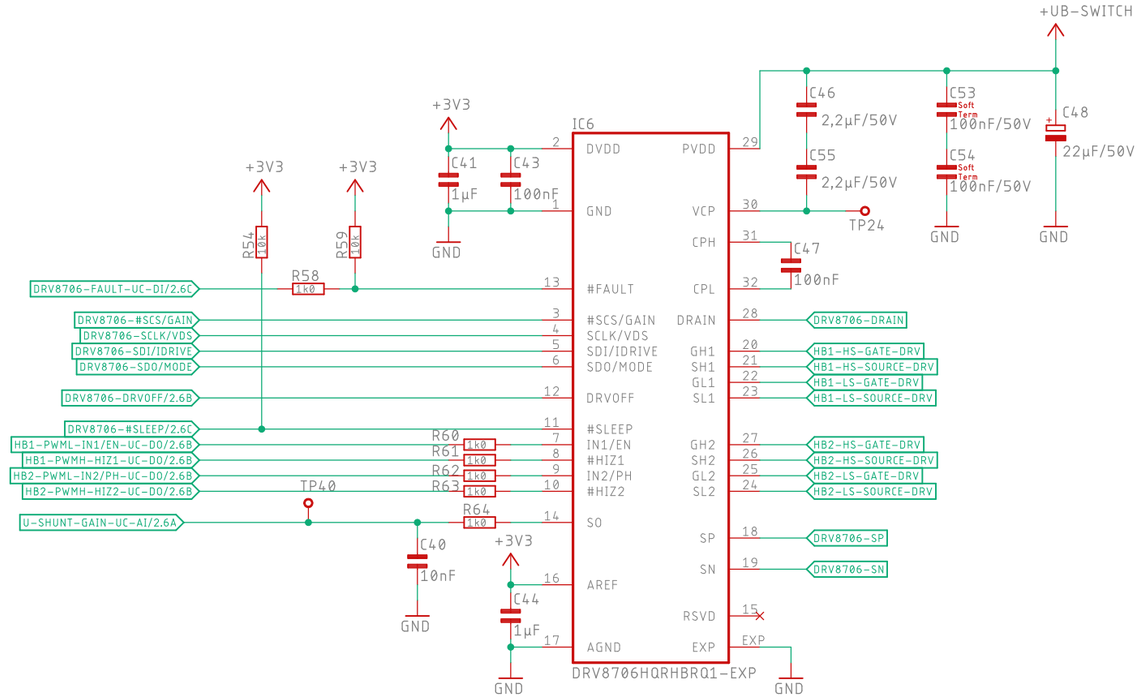

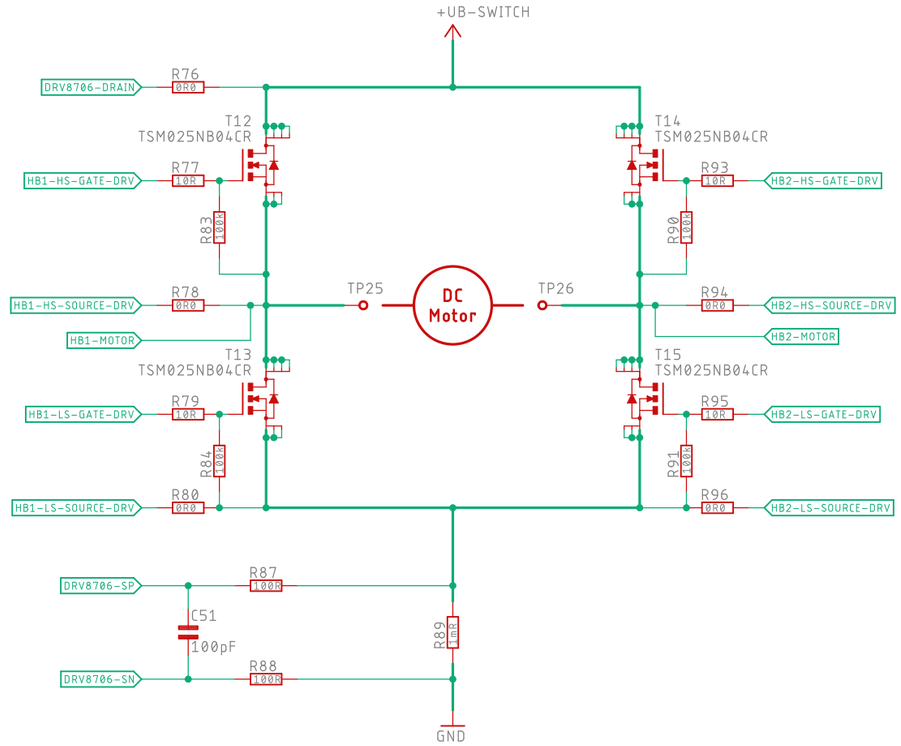

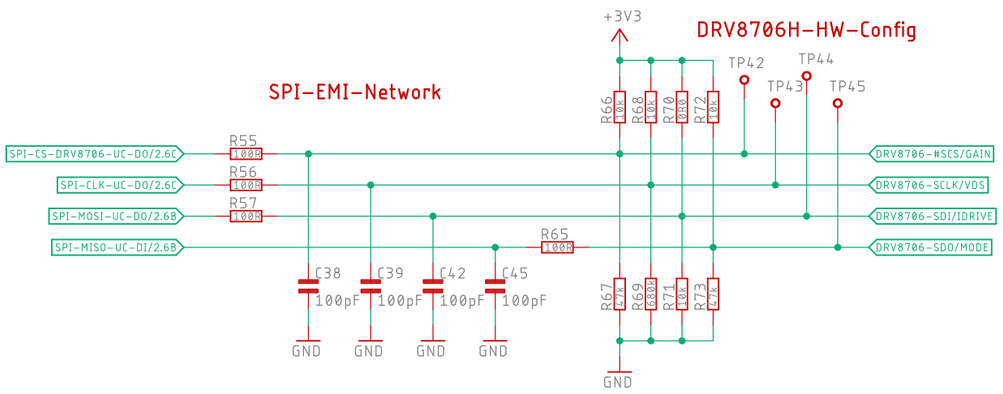

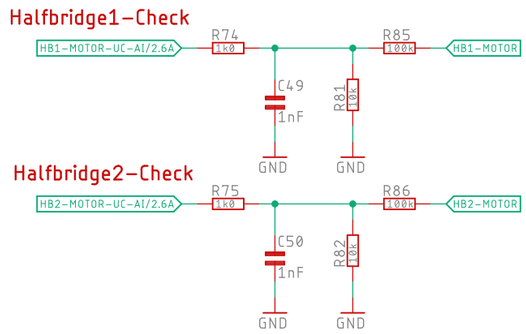

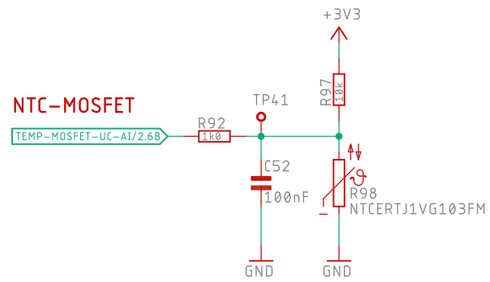

DRV8706-HW-Config (4-Level)
Level1: R=0R to GND
Level2: R=47k to GND
Level3: R>500k to GND
Level4: R=0R to DVDD

Gain:
Level 1 = 10.15 V/V
Level 2 = 20 V/V -> R=47k to DVDD
Level 3 = 40 V/V
Level 4 = 80 V/V

Mode - PWM input mode settings
Level 1 = Half-Bridge Control
Level 2 = PH/EN H-Bridge Control -> R=47k to GND
Level 3 = PWM H-Bridge Control
Level 4 = Split HS and LS Control

DRV8706-HW-Config (6-Level)
Level1: R=0R to GND
Level2: R=30k to GND
Level3: R=100k to GND
Level4: R>500k to GND
Level5: R=62k to DVDD
Level6: R=0R to DVDD

VDS overcurrent protection threshold:
Level 1 = 0.06 V
Level 2 = 0.10 V
Level 3 = 0.2 V
Level 4 = 0.5 V -> R=680k to GND
Level 5 = 1 V
Level 6 = disabled

IDRIVE Peak gate current (sink/source):
Level 1 = 1 mA
Level 2 = 4 mA
Level 3 = 8 mA
Level 4 = 16 mA
Level 5 = 31 mA
Level 6 = 62 mA -> R=0R to DVDD

FM8 FIDUCIAL-ROUND-1MM_LS2MM
FM9 FIDUCIAL-ROUND-1MM_LS2MM
FM10 FIDUCIAL-ROUND-1MM_LS2MM

B&W Engineering und Datensysteme GmbH

Hardware & Software Development

www.buw-eng.com

Description:

EL33-Zero -Smart Full-Bridge-Gate-Driver -Full-Bridge

Date	Name	Modification	Sign	
				Schematic:
				PCB:
				Page: 4/4
				Date: 17.07.2024 11:31
				File: EL33Zero_SCH v313